NEED	○	.	PURCHASING SPECIFICATION	.	REQUEST FOR APPROVAL	.	DELIVERY DRAWING	.	INSPECTING STANDARD	.	QC-PROCESS

FILE NAME:B3-19581-009X.DRW

3RD ANGLE PROJECTION

CAREER

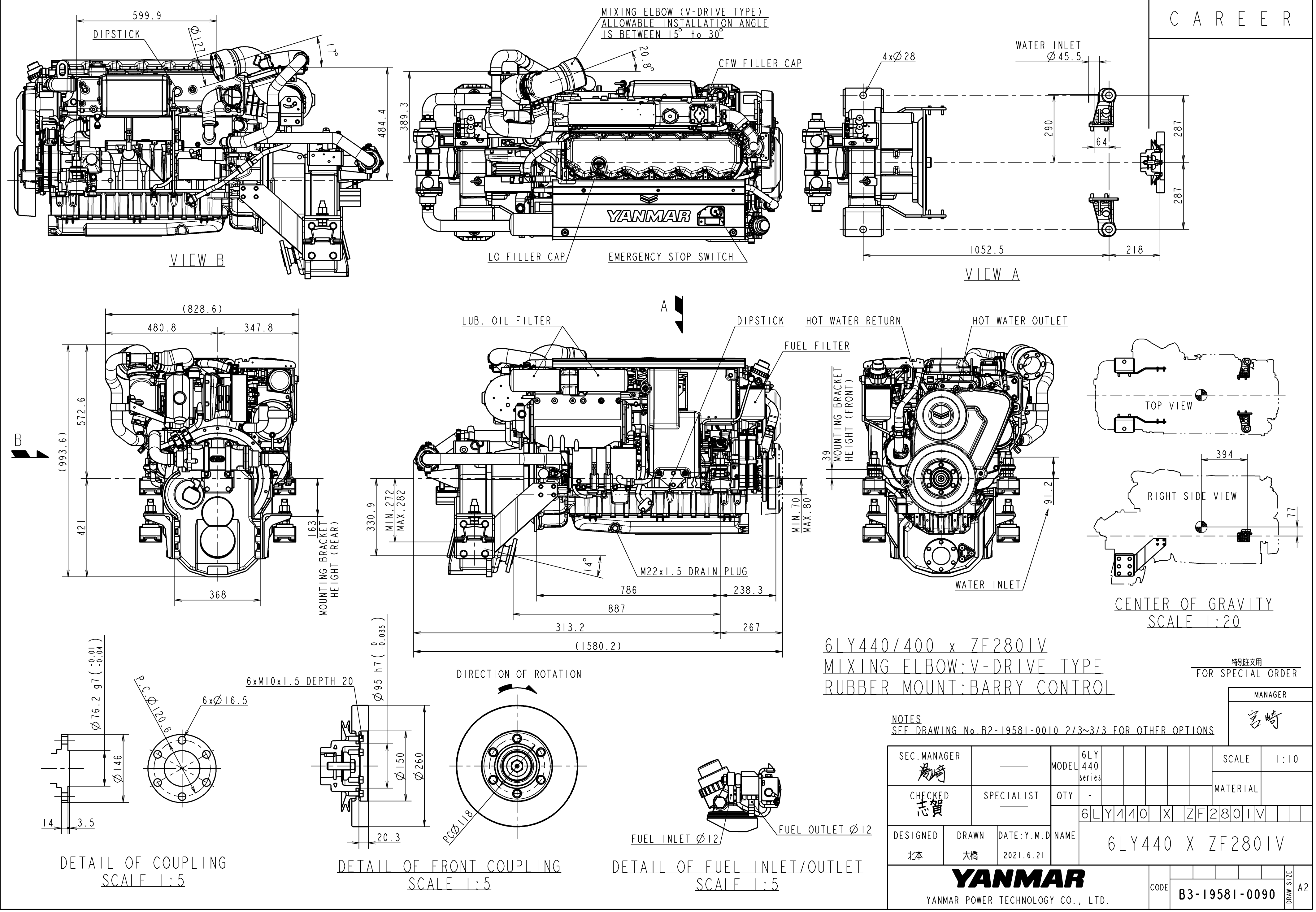

6LY440/400 x ZF2801V
MIXING ELBOW:V-DRIVE TYPE
RUBBER MOUNT:BARRY CONTROL

特別注文用
FOR SPECIAL ORDER

NOTES
SEE DRAWING No.B2-19581-0010 2/3~3/3 FOR OTHER OPTIONS

MANAGER	宮崎			
SEC.MANAGER 島崎	——	MODEL	6LY 440 series	SCALE 1:10
CHECKED 志賀	SPECIALIST	QTY	-	MATERIAL
DESIGNED 北本	DRAWN 大橋	DATE:Y.M.D 2021.6.21	NAME	6LY440 X ZF2801V
YANMAR	YANMAR POWER TECHNOLOGY CO., LTD.	CODE	B3-19581-0090	DRAW SIZE A2

3D-CAD

NOTICE
GEOMETRICAL TOLERANCE
KIND OF TOLERANCE / SYMBOL
FORM: STRAIGHTNESS TOLERANCE; CIRCULARITY TOLERANCE; PROFILE OF LINE TOLERANCE; FLATNESS TOLERANCE; CYLINDRICITY TOLERANCE; PROFILE TOLERANCE OF SURFACE
ORIENTATION: PARALLELISM TOLERANCE; PERPENDICULARITY TOLERANCE; ANGULARITY TOLERANCE
LOCATION: POSITIONAL TOLERANCE; COAXIALITY OR CONCENTRICITY TOLERANCE; SYMMETRY TOLERANCE
RUN-OUT: CIRCULAR RUN-OUT TOLERANCE; TOTAL RUN-OUT TOLERANCE

UNCONTROLLED 2021/06/30 10:24:20