NEED	○	PURCHASING SPECIFICATION	REQUEST FOR APPROVAL	DELIVERY DRAWING	INSPECTING STANDARD	QC-PROCESS

FILE NAME:B2-63500-0000.DRW

3RD ANGLE PROJECTION

CAREER

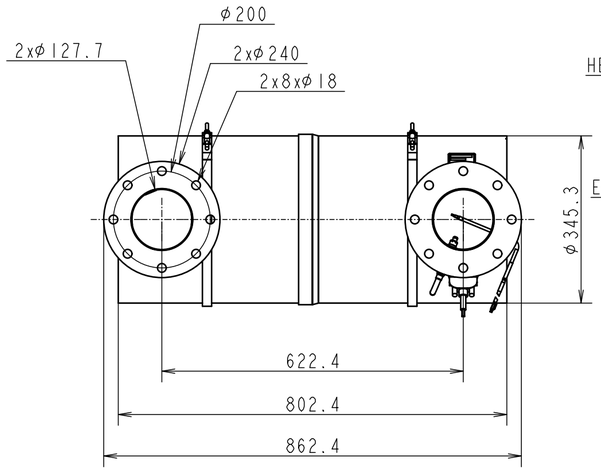

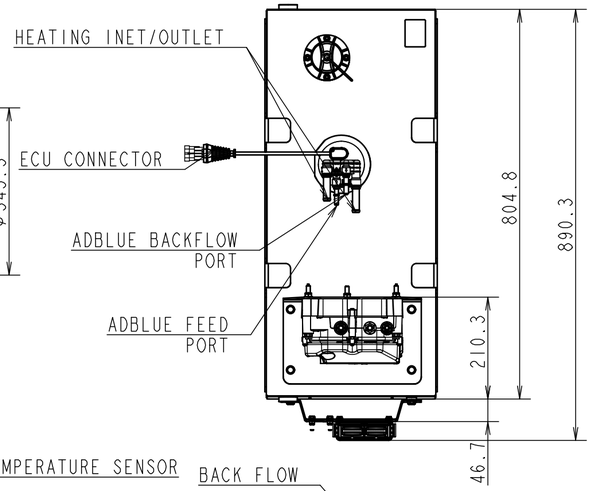

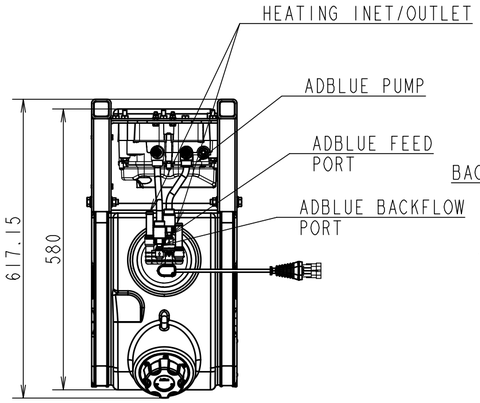

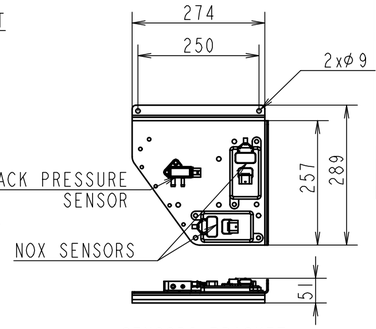

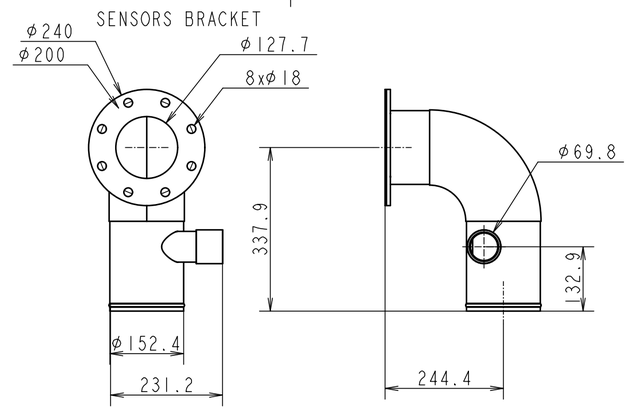

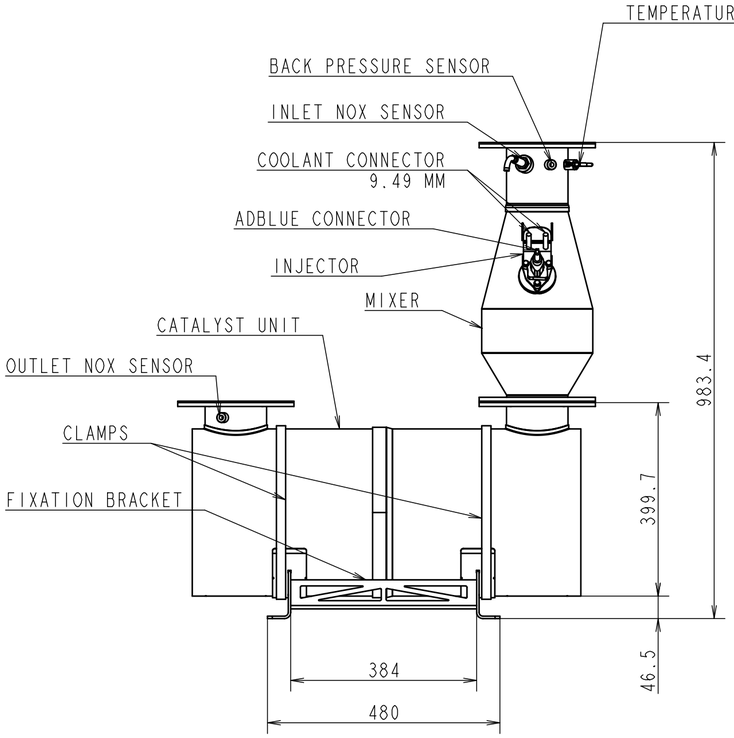

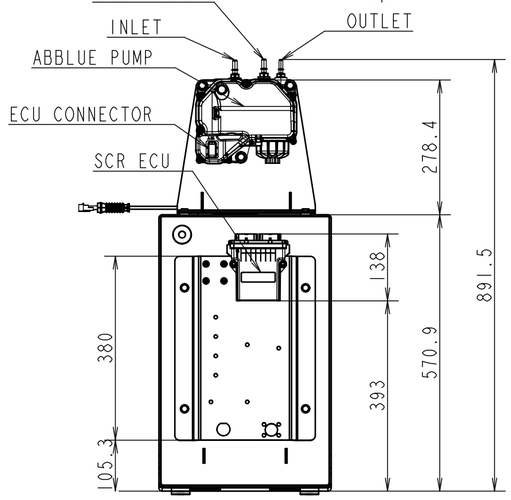

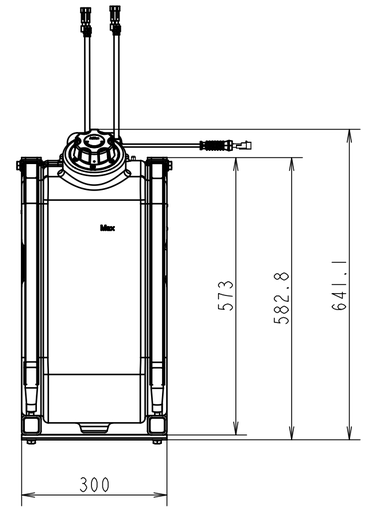

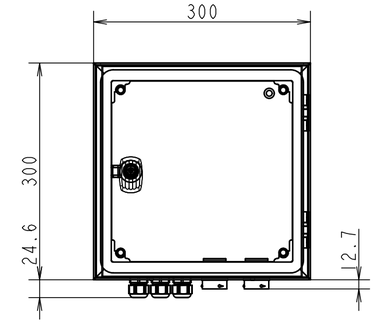

INTERFACE BOX

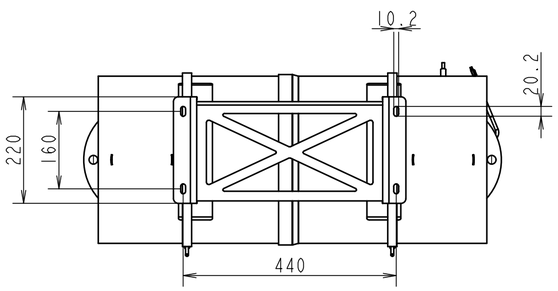

SCR UNIT

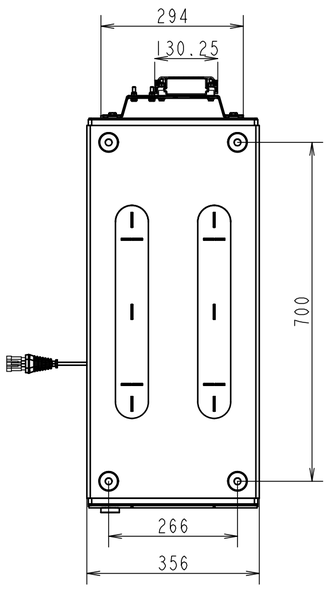

150L ADBLUE TANK

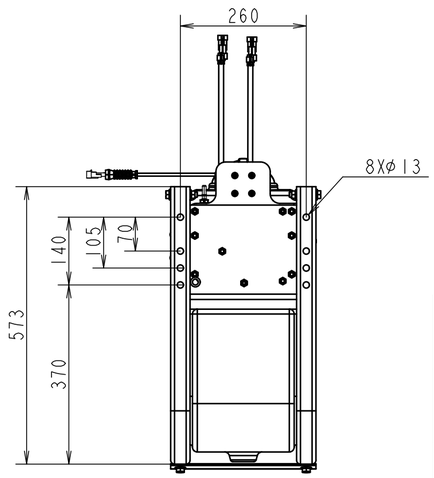

50L ADBLUE TANK

3D-CAD	
NOTICE	
GEOMETRICAL TOLERANCE	
KIND OF TOLERANCE	SYMBOL
FORM	STRAIGHTNESS TOLERANCE
	CIRCULARITY TOLERANCE
	PROFILE OF LINE TOLERANCE
	FLATNESS TOLERANCE
	CYLINDRICITY TOLERANCE
	PROFILE TOLERANCE OF SURFACE
ORIENTATION	PARALLELISM TOLERANCE
	PERPENDICULARITY TOLERANCE
	ANGULARITY TOLERANCE
LOCATION	POSITIONAL TOLERANCE
	COAXIALITY OR CONCENTRICITY TOLERANCE
	SYMMETRY TOLERANCE
RUN-OUT	CIRCULAR RUN-OUT TOLERANCE
	TOTAL RUN-OUT TOLERANCE

MANAGER	

SEC.MANAGER		MODEL	6LY 400	6LY 440					SCALE	67:600
CHECKED	SPECIALIST	QTY							MATERIAL	
DESIGNED	DRAWN	DATE:Y.M.D 2024.07.17	NAME	6LY CR SCR						

YANMAR

YANMAR MARINE INTERNATIONAL B.V.

CODE	B2-63500-0000	DRAW SIZE	A2

NEED	○	·	PURCHASING SPECIFICATION	·	REQUEST FOR APPROVAL	·	DELIVERY DRAWING	·	INSPECTING STANDARD	·	QC-PROCESS

FILE NAME:B2-63500-0000.DRW

3RD ANGLE PROJECTION

C A R E E R

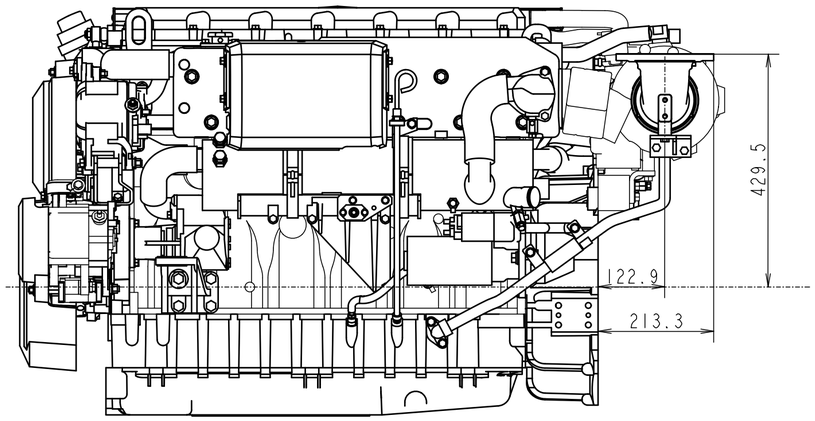

6LY WITH VERTICAL DRY EXHAUST

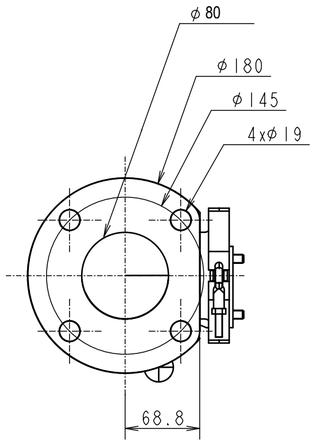

DRY EXHAUST FLANGE

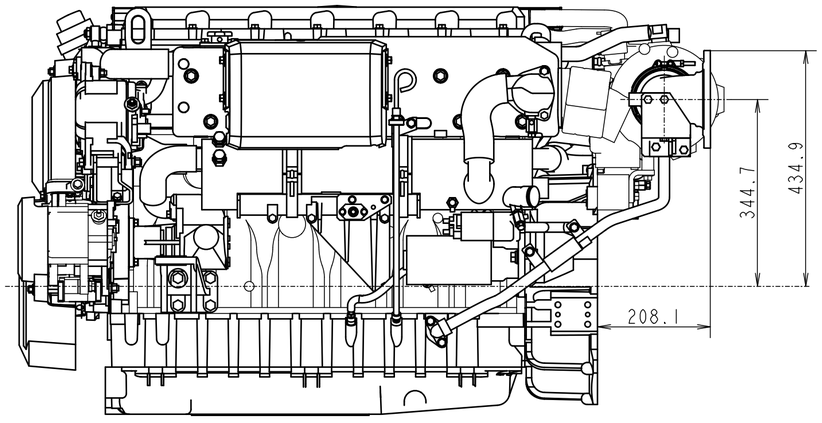

6LY WITH HORIZONTAL DRY EXHAUST

FOR THE REST OF THE DETAILS PLEASE REFERE TO B2-19581-0010

3D-CAD

NOTICE

GEOMETRICAL TOLERANCE

KIND OF TOLERANCE		SYMBOL
FORM	STRAIGHTNESS TOLERANCE	—
	CIRCULARITY TOLERANCE	○
	PROFILE OF LINE TOLERANCE	⌒
	FLATNESS TOLERANCE	▱
	CYLINDRICITY TOLERANCE	⌭
	PROFILE TOLERANCE OF SURFACE	⌓
ORIENTATION	PARALLELISM TOLERANCE	//
	PERPENDICULARITY TOLERANCE	⊥
	ANGULARITY TOLERANCE	∠
LOCATION	POSITIONAL TOLERANCE	⌖
	COAXIALITY OR CONCENTRICITY TOLERANCE	◎
	SYMMETRY TOLERANCE	⌯
RUN-OUT	CIRCULAR RUN-OUT TOLERANCE	↗
	TOTAL RUN-OUT TOLERANCE	⌰

MANAGER

SEC.MANAGER			MODEL	6LY 400	6LY 440					SCALE	67:600
CHECKED	SPECIALIST		QTY							MATERIAL	
DESIGNED	DRAWN	DATE:Y.M.D 2024.07.17	NAME	6LY400/440 SCR							

YANMAR

YANMAR MARINE INTERNATIONAL B.V.

CODE B2-63500-0000

DRAW SIZE A2