NEED	○	·	PURCHASING SPECIFICATION	·	REQUEST FOR APPROVAL	·	DELIVERY DRAWING	·	INSPECTING STANDARD	·	QC-PROCESS

FILE NAME:B2-063200-0020.DRW

3RD ANGLE PROJECTION

CAREER

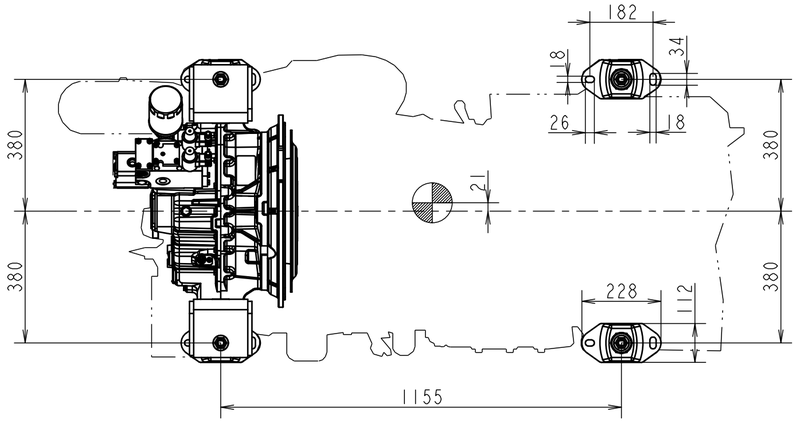

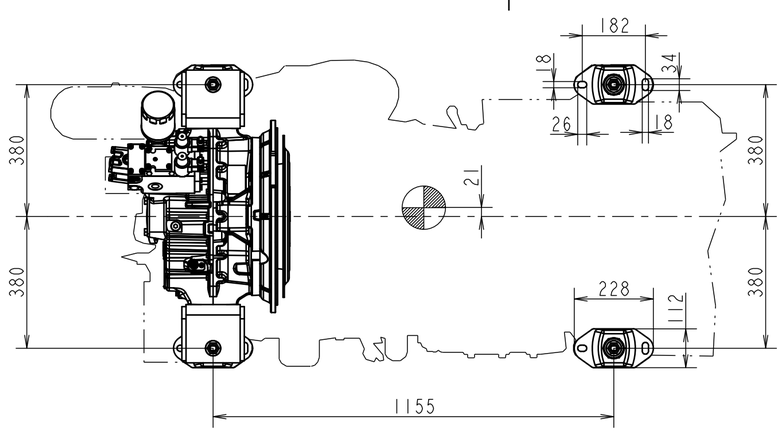

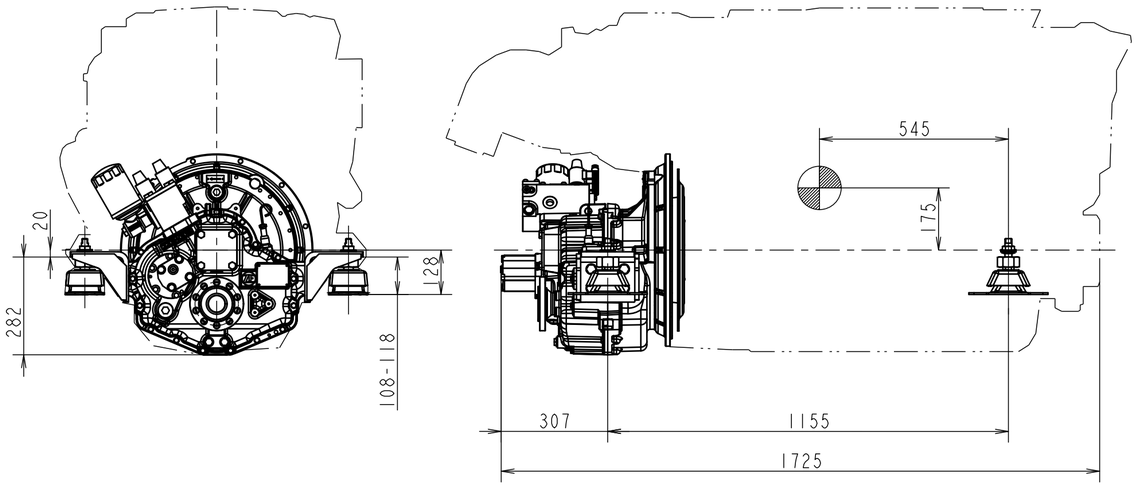

ZF305-3 MARINE GEAR

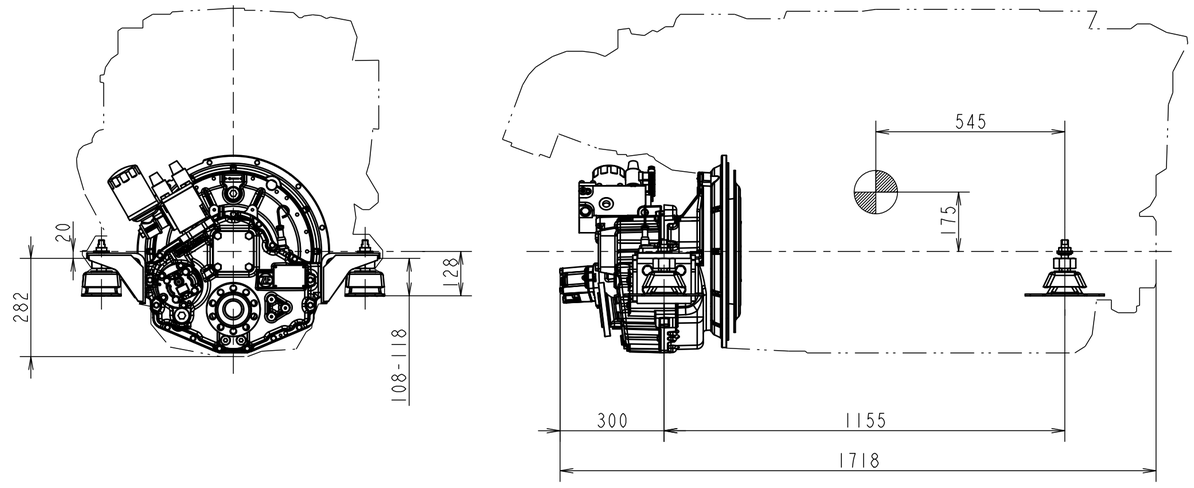

ZF305-3A MARINE GEAR

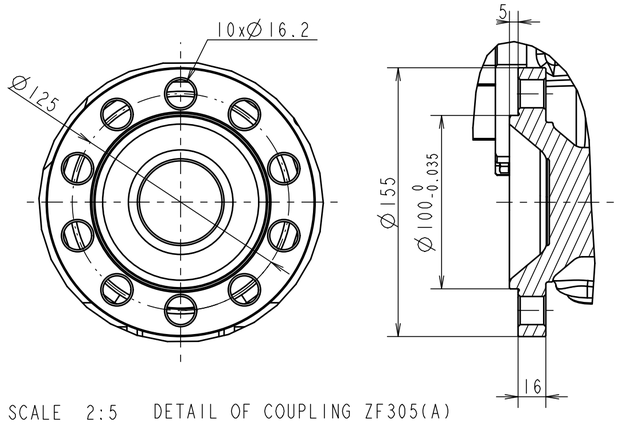

SCALE 2:5 DETAIL OF COUPLING ZF305(A)

SHOW CENTER OF GRAVITY

NOTE
1. REFER TO B2-63200-0010 DRAWING FOR DETAIL OF ENGINE.
* SPECIAL ORDER RATIO

GEAR MODEL	REDUCTION				DRY ENGINE WEIGHT	DIRECTION OF ROTATION (AT OUTPUT COUPLING)
ZF305-3	0.884*	1.000*	1.220	1.486*	1198 kg	BOTH
	1.968	2.250*	2.500	2.917	1198 kg	
ZF305-3A	1.200*	1.514	1.733	2.037	1198 kg	
	2.179	2.423			1198 kg	

量産用
FOR MASS PRODUCTION

MANAGER

SEC.MANAGER		MODEL	6LT 500	6LT 580	6LT 640				SCALE	1:300
CHECKED	SPECIALIST	QTY	1	1	1				MATERIAL	
DESIGNED	DRAWN	DATE:Y.M.D 2021.01.25	NAME	6LT APPLICATION						

YANMAR
YANMAR MARINE INTERNATIONAL B.V.

CODE B2-63200-0020 DRAW SIZE A2

3D-CAD

NOTICE

GEOMETRICAL TOLERANCE		
KIND OF TOLERANCE		SYMBOL
FORM	STRAIGHTNESS TOLERANCE	—
	CIRCULARITY TOLERANCE	○
	PROFILE OF LINE TOLERANCE	⌒
	FLATNESS TOLERANCE	▱
	CYLINDRICITY TOLERANCE	⌭
	PROFILE TOLERANCE OF SURFACE	⌓
ORIENTATION	PARALLELISM TOLERANCE	//
	PERPENDICULARITY TOLERANCE	⊥
	ANGULARITY TOLERANCE	∠
LOCATION	POSITIONAL TOLERANCE	⌖
	COAXIALITY OR CONCENTRICITY TOLERANCE	◎
	SYMMETRY TOLERANCE	⌯
RUN-OUT	CIRCULAR RUN-OUT TOLERANCE	↗
	TOTAL RUN-OUT TOLERANCE	⌰